Hellenic Republic

ΑΑΔΕ
Independent Authority
for Public Revenue (IAPR)

A. Directorate-General for e-Government

Directorate for Infrastructure Management

Department E

Postal Address : Pireos 72, Moschato

Zip Code : 18346

Phone : 213 1621133

E-Mail : didypod.5@aade.gr

Url : www.aade.gr

B. Directorate for Tax Administration

Directorate for Audits

Department A

Postal Address : Handri 1 & Thessalonikis

Zip Code : 18346 Moschato

Phone :

E-Mail :

Url : www.aade.gr

POSTED ON THE INTERNET

ΑΔΑ: ΨΛΖΝ46ΜΠ3Ζ-ΜΙΚ

Greek Government

Gazette: 3940 B /25.07.2022

Athens, 13-7-2022

A.1098

TO: List of Recipients

SUBJECT: Determination of technical specifications (communication protocol) and other functions for the interconnection between Fiscal Electronic Mechanisms and EFT/POS terminals. Implementation on the principle of "collection by card - mandatory issuance of a receipt by a FEM".

DECISION

THE GOVERNOR OF I.A.P.R.

Considering:

1. The provisions of:

a. Articles 12 and 40 of Law 4308/2014 (A' 251), as in force.

b. Articles 15 & 15A of Law 4174/2013 (A' 170), as added by the provisions of Law 4646/2019 (A'201) as in force.

c. The joint decision A.1138/12.6.2020 of the Minister of Finance and of the Governor of the Independent Authority for Public Revenue "Determination of the scope, time and procedure for electronic transmission of data to the Independent Authority for Public Revenue, as well as any other matter necessary for the implementation of the provisions of article 15A of Law 4174/2013 " (B'2470).

d. Decision A.1024/31.1.2020 of the Governor of the Independent Authority for Public Revenue "Supplementary technical specifications of communication and encryption protocol for the transmission of data to the FEM information system" (B' 317).

e. Decision A.1011/2020 of the Governor of the Independent Authority for Public Revenue "Withdrawal from the use of models of Fiscal Electronic Mechanisms (FEMs), which received an eligibility license based on A.Y.O.O. POL.1234/9.10.2002 (B ?1362) and POL.1135/26-10-2005 (B ?1592), except of Fiscal Sign Machines and Fiscal Printer Taximeters" (B' 85).

f. Decision POL.1166/2018 of the Governor of the Independent Authority for Public Revenue, "Technical specifications of communication and encryption protocol for the transmission of data to the FEM information system" (B'3603).

g. Decision POL.1220/2012 (B' 3517) "Codification – Completion of technical specifications of Fiscal Electronic Mechanisms and systems. Procedures for their use and operation. Specifications of files sent to GSIS. "

h. Decision POL.1221/2012 (B' 3513) "Upgrade of the drivers of the Fiscal Sign Machines. Determination of fiscal documents data files to be sent to the GSIS pursuant to the provisions of article 20 of Law 3842/2010 (A' 58)".

i. Chapter A of Part One of Law 4389/2016 "Urgent provisions for the implementation of the agreement on finance targets and structural reforms and other provisions" (A' 94).

2.The European Commission's document C(2012) 4961 providing us with comments on notification 2012/266/GR.

3.The European Commission's document C(2012) 4967 providing us with comments on notification 2012/267/GR.

4.The approval of the European Commission on notification 2022/183/GR, for the acceptance of the urgency procedure, No. GROW/E3/BH/as (2022)3027420/12.04.2022 letter addressed to the Minister Plenipotentiary of the Permanent Representation of Greece in Brussels and communicated to us through ELOT.

5.Decision Δ.ΟΡΓ.Α 1125859 ΕΞ 2020/23.10.2020 of the Governor of the Independent Authority for Public Revenue "Organization of the Independent Authority for Public Revenue (I.A.P.R.)" (B' 4738)

6.Act of the Council of Ministers No. 1. of 20.1.2016 "Selection and appointment of the Secretary General of the General Secretariat for Public Revenue of the Ministry of Finance" (Y.O.D.D. 18) in conjunction with the provisions of the first subparagraph of para. 10 of article 41 of Law 4389/2016, the Decisions No. 39/3/30.11.2017 (Y.O.D.D. 689) of the Board of Directors of I.A.P.R. and Decision 5294ΕΧ2020/17.01.2020 of the Minister of Finance "Renewal of the service of the Governor of the Independent Authority for Public Revenue" (Y.O.D.D. 27)

7.The conclusion of the Project Management Team at IAPR on the elaboration of the specifications for the interconnection of cash registers with POS terminals, in the framework of reform 16614 for the reform and interconnection of cash registers with the fiscal administration, implemented in the framework of the National Recovery and Resilience Plan "Greece 2.0"

8.The need to interconnect FEMs with EFT/POS Terminals, to ensure the issuance of fiscal receipts when card payments are performed, for effective fiscal monitoring and the reduction of tax evasion.

9.The fact that, from the procedures of this decision, no expenditure is caused at the expense of the IAPR Budget.

WE DECIDE

We define the obligation, the way and the procedures for ensuring the issuance of data by FEMs on transactions for which the collection is carried out by card and sending them to the Information System of FEMs and we specify the technical specifications for the development of a communication protocol between the company's FEMs and the card acceptance terminals it uses as well as other functions.

Article 1

DEFINITIONS

For the purposes of this Decision, the following concepts and definitions are defined:

1.1 "Electronic Funds Transfer at the Point of Sale (EFT/POS)": means the electronic transfer of funds at the point of sale. It is carried out with electronic machines available in commercial stores and which debit the amount of the transaction to the bank account of customers, while crediting the payment account of the merchant / trader.

1.2 "Electronic Cash Register" or Fiscal Electronic Mechanism (FEM) : the Fiscal Electronic Cash Register, the Special Secure Fiscal Data Marking Device (Fiscal Sign Machine, ΕΑΦΔΣΣ) and the Autonomous Fiscal Device (AFD, Fiscal Printer, ΑΔΗΜΕ).

1.3 "Session number": a common 6-digit code, different for each new transaction, is created by the FEM and serves as a control of the relevance of messages and avoidance of critical errors. It is a unique code that characterizes each transaction. EFT/POS must check that each new FEM request comes with a different session number than the previous one.

1.4 "Ecr-id" means the serial number of the fiscal electronic mechanism.

1.5 "PSP" (Payment Service Provider) is defined as the payment service provider that undertakes the process of accepting-clearing electronic payments.

1.5 "Receipt-number" means the serial number of the receipt.

1.6 "MAC (message authentication checksum)" is defined as the mechanism for certifying the authenticity of the requests of the FEM. It protects the integrity of the message data as well as the authenticity of the sender during the exchange of fields between the two subsystems.

- The relevant mechanism of MAC (message authentication checksum) in terms of implementation for communication between the two parties is summarized in the following stages:
- At the initial stage of preparation, it is agreed between EFT / POS providers and FEM to store on both devices a common initial key "master key – MAC MK", with procedures and practices that will protect it from leaking.
- FEM generates a pseudorandom session key "MAC SK" for use.
- Through a control flow ([CONTROL] message), FEM sends to EFT/POS the "Secret Key" encrypted under "Master Key".
- EFT/POS decrypts the "Secret Key" using the "Master Key", and stores it for use.
- During transaction flows it is the "Secret Key" that is used to check the validity of the sender.

According to the protocol, it is recommended to use a T-DES MAC algorithm (the usual CBC 1 mode) with a double length key (16 bytes).

MAC (Message Authentication Code) is mandatory. The obligation is lifted only for software maintenance and problem solving.

Article 2

Obligation of interconnection between Fiscal Electronic Mechanisms (FEM) and EFT/POS terminals.

The obligation of interconnection concerns the entities that issue sales documents through FEMs (Fiscal Electronic Cash Registers, Fiscal Sign Machines, AFDs), in accordance with the provisions of Law 4308/2014 (A' 251) and at the same time have the obligation to use EFT/POS.

Interconnection concerns three systems: F.E.M., EFT/POS and PAYMENT SERVICE PROVIDERS:

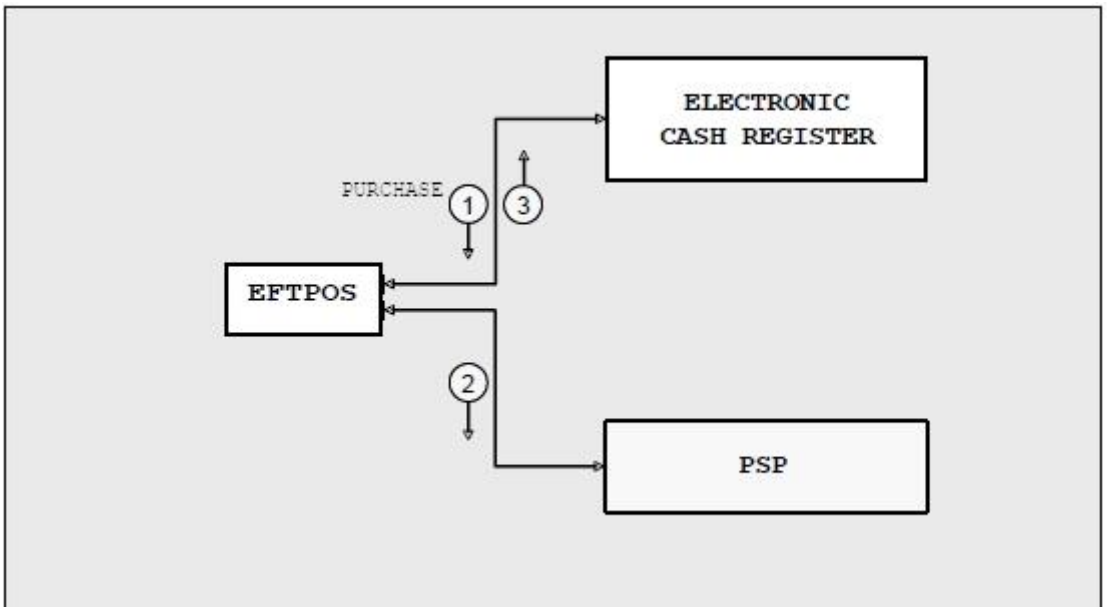

The usual communication flow:

1. The transaction is initiated by FEM. The operator chooses card payment and the FEM sends a relevant request to EFT/POS.

2. EFT/POS acknowledges to FEM the receipt of the request and sets the FEM in a state of waiting for the result.

3. EFT/POS connects to the payment service provider for online or offline approval or offline rejection or interruption of the transaction.

4. EFT/POS responds to the FEM with the final result: rejection or approval. In the approval, it sends transaction details (such as transaction number, approval code, etc.) as well as data for printing its receipt from the FEM if it supports it.

5. The FEM confirms receipt of the final result. In case this acknowledgement, for any reason, is not substantiated by EFT/POS, then EFT/POS creates a relevant marking for the non-processing of the transaction by the FEM.

Article 3

Interconnection Protocol between Retail sales documents issuance Systems and EFT POS.

3.1. The Protocol for the Interconnection of Retail sales documents issuance systems and EFT POS is described in the appendix.

3.2. EFT POS that apply this protocol are not allowed to operate autonomously for sale transactions, i.e. card payments. In particular, it is not allowed to enter by typing the payment amount in the case of sale transactions. In the specific case where a sales document has already been issued by the FEM for which a subsequent payment by the EFT POS is expected, this sales document is preloaded into the EFT POS by the FEM. EFT POS can then perform a single sale transaction for each of the preloaded sales

documents, without however allowing the change of the amount to be paid. In all cases, however, it is allowed to adjust the number of installments in EFT POS. EFT POS are allowed to carry out refund transactions autonomously, i.e. refunds to a card, which are documented by the respective issued sales documents. EFT POS performs pre-approvals autonomously.

3.3. This protocol does not apply to EFT POS if the business is not obliged to use FEM and does not use FEM. It is also allowed to process transactions at EFT POS without a FEM connection, at gas stations or taxis, where the FEM is driven by a fuel pump or taximeter respectively. In such cases, this Protocol shall not apply.

Article 4

Validity of the Decision

4.1 This Decision shall apply from 01/01/2023

4.2. That decision, together with the appendix, which forms an integral part thereof, to be published in the Official Government Gazette.

THE GOVERNOR OF IAPR

GEORGIOS PITSILIS

APPENDIX

INTERCONNECTION OF RETAIL RECEIPTS ISSUANCE SYSTEMS AND PAYMENT CARD ACCEPTANCE TERMINALS (EFTPOS)

Basic communication protocol

Version: 1.07

Date: 24 June 2022

INDEX

1. Introduction..... 9
2. The general schem..... 9

3. The physical connection.....10
3.1. Connect over tcp/ip 10
3.2.Connect via usb or RS232..... 11
4. Flow and messages at a glance.....11
4.1. Ordinary sale flow (or other transactions)..... 12
4.2. Flow in case of failure to process a payment transaction..... 13
4.3. Echo flow.....13
4.4. Flow of executing control command.....14
4.5. Repeat flow [result] of last transaction..... 14
4.6. Flow for repeated [result] of all pending refund transactions..... 15
5. Flow and messages in detail.....17
5.1. Message syntax.....17

5.2. [ECHO] message..... 18
5.3. [AMOUNT] message..... 19

5.4. [CONFIRMED] message..... 21

5.5. [RESULT] message..... 21

5.6. [ACK-RESULT] message..... .32
5.7. [REGRECEIPT] message..... 33
5.8. [RESEND-ONE]message 33
5.9. [RESEND-ALL]message 35
5.10. [ERROR] message..... 35
5.11. [SUCCESS] message 38
5.12. [CONTROL] message 38
5.13. Other transaction messages 40

6. Description of the MAC mechanism.....41
7. Summary of handling for matching daily sums 42

1. INTRODUCTION

The text describes the minimum communication requirements between retail receipt issuance systems (FEMs) and EFTPOS located in the field.

2. THE GENERAL SCHEME

The interconnection concerns three systems: ECR, EFTPOS and PAYMENT SERVICE PROVIDERS:

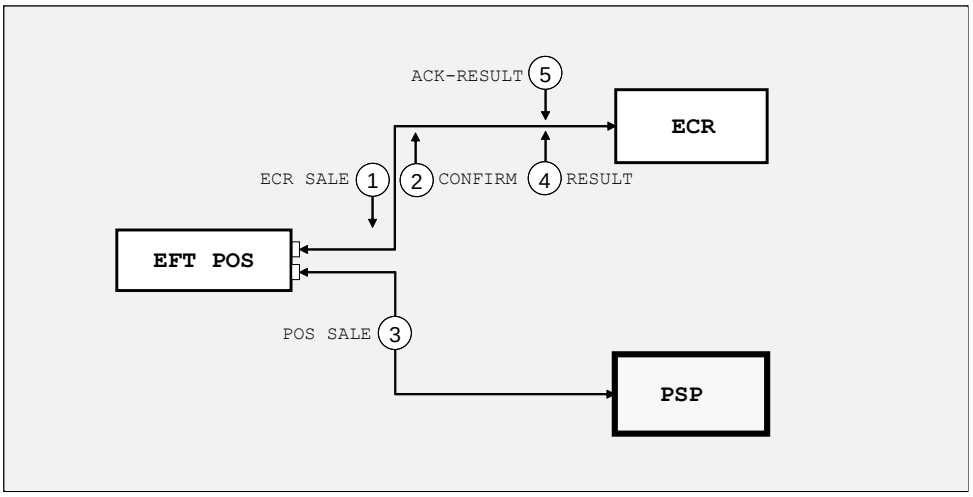

Picture 1

The usual communication flow follows 5 steps:

1. The transaction is initiated by the ECR. The operator chooses card payment and ECR sends a request to EFTPOS.
2. The EFTPOS immediately acknowledges the request to the ECR, which enters in waiting mode for the final result.
3. The EFTPOS connects to the payment service provider for online approval or offline approves or offline rejects or stops the transaction.
4. The EFTPOS responds to the ECR with the final result: rejection or approval. In the approval, it sends transaction details (such as transaction number, approval code, etc.). The final result is sent directly to ECR, before printing starts from EFTPOS. If the ECR supports this, the final result includes data so that the payment receipt is printed by the ECR.
5. The ECR acknowledges the final result. If this acknowledgement does not reach EFTPOS for any reason, EFTPOS marks this transaction as not fully processed by the ECR.

Key assumptions and limitations:

1. Only ECR can initiate a new sale transaction (purchase, purchase by installments, registration of pre-approval, mailorder). EFTPOS has a locked keyboard and menu when performing sale transactions.

2. No interruption of processing in EFTPOS is allowed by the ECR. If during step 3 ECR owner wants to stop processing, then this is done manually in EFTPOS.
3. EFTPOS serves only one ECR request at a time, it does not have a queue of requests and cannot even respond to a new request while the current one is being processed.
4. The communication does not contain sensitive transaction data, such as bounced card number, cvv2, track2 or cardholder name.
5. EFTPOS should keep log files with the following priority and depending on their storage and computing capabilities:

    a) Communication problems or system errors (mandatory)

    b) Operator actions related to the interface (mandatory)

    c) Transaction basic data (time/amount/sessionId/outcome)

    d) Full recording of messages exchanged

3. THE PHYSICAL CONNECTION

In the connection between EFTPOS-ECR, EFTPOS acts as a "server" in relation to the ECR, and as a "client" in relation to the payment service provider.

3.1. CONNECT OVER TCP/IP

The connection between EFTPOS and ECR over TCP/IP is:

- Either Direct connection ECR-EFTPOS. Examples: connection to a LAN network with Ethernet cables, WIFI connection, etc.
- Or via middleware system specially made for EFTPOS that cannot be connected otherwise.

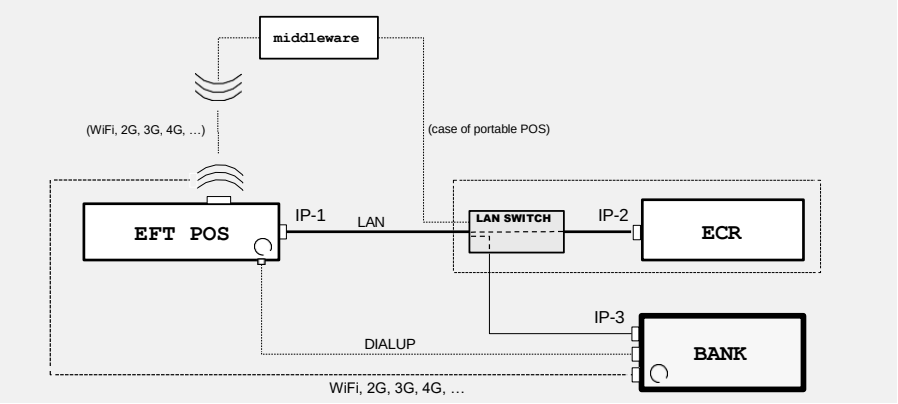

Picture 2

The LAN switch can be an external device or built-in.

In the case of a middleware connection, as the local IP of the EFTPOS is typically unknown or inaccessible to the ECR, some additional implementation is required, so that the connection to the middleware will be opened by EFTPOS with a "logon" ,and will keep it open as needed, entering itself into a waiting loop for ECR requests. The middleware system acts as a simple message forwarder.

3.2. CONNECT VIA USB OR RS232

USB connection is supported without changing the communication protocol at all.

RS232 connection is also supported, with the only protocol change being the addition of a small string as a prefix to each exchanged message.

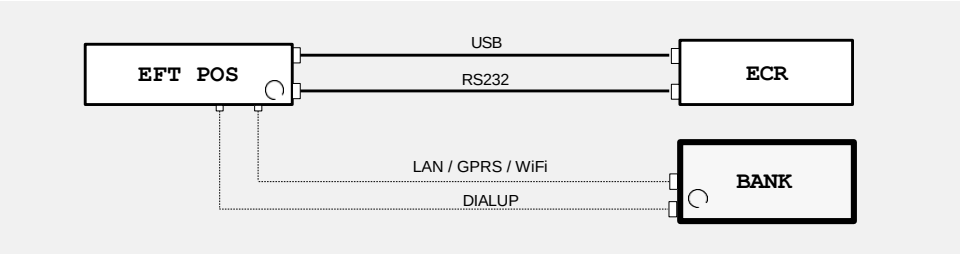

Picture 3

4.FLOW AND MESSAGES AT A GLANCE

Using symbolic names, messages exchanged between ECR and EFTPOS are:

[AMOUNT]:	Purchase Start Request (ECR->EFTPOS)
[CONFIRMED]:	Confirmation of receipt of request (EFTPOS->ECR)
[ERROR]:	Unable to service request (EFTPOS->ECR)
[RESULT]:	Transaction result (EFTPOS->ECR)
[ACK-RESULT]:	Acknowledge of [RESULT] (ECR->EFTPOS)
[RESEND-ONE]:	Request to resend [RESULT] of a transaction (ECR–>EFTPOS)
[RESEND-ALL]:	Request to send [RESULT] for the pending refund transactions executed autonomously by EFTPOS without using ECR, executed transactions involving preloaded receipts and invoices already issued by ECR. (ECR ->EFTPOS)

[ECHO]: Communication Test (ECR->EFTPOS->ECR)

[CONTROL]: Miscellaneous Configuration Command (ECR->EFTPOS)

[SUCCESS]: General Success Message (EFTPOS->ECR)

[REGRECEIPT]: Send a retail receipt or invoice for later sales transaction (ECR->EFTPOS) (optional)

Extensions for other transactions:

[AMOUND-REFUND]: Refund request (ECR->EFTPOS)

[AMOUNT-VOID]: Cancellation request (ECR->EFTPOS)

The following 6 message flows are allowed, which always run on the same connection (in the same session).

4.1. ORDINARY SALE FLOW (OR OTHER TRANSACTIONS)

[t0]	EFTPOS ← [AMOUNT] ← ECR In addition to the purchase amount, ECR sends other information, such as receipt number, cash register serial number, cashier code, etc	
[t1]	EFTPOS → [CONFIRMED] → ECR EFTPOS immediately acknowledges the command, and the ECR waits for a result.	t1-t0 < 2 sec
	EFTPOS processes the request, requests card insertion, logs in for online approval, etc.	
[t2]	EFTPOS → [RESULT] → ECR EFTPOS responds with the result, which can be a rejection or approval. If it is an approval, it sends additional transaction details (e.g. approval code, transaction number, etc.)	Usually t2-t1 < 60 sec

[t3]	EFTPOS ← [**ACK-RESULT**] ← ECR The ECR acknowledges the receipt of the final result command, and the EFTPOS registers (if it was an approval) that the transaction has been fully processed by the ECR.	t3-t2 < 2 sec

The above four messages ([AMOUNT], [CONFIRMED], [RESULT], [ACK- RESULT]) have a common 6-digit session number, different for each new transaction, which ECR creates and which serves as a control of message relevance and avoidance of critical errors.

A schematic illustration of the standard flow is shown in Picture 4.

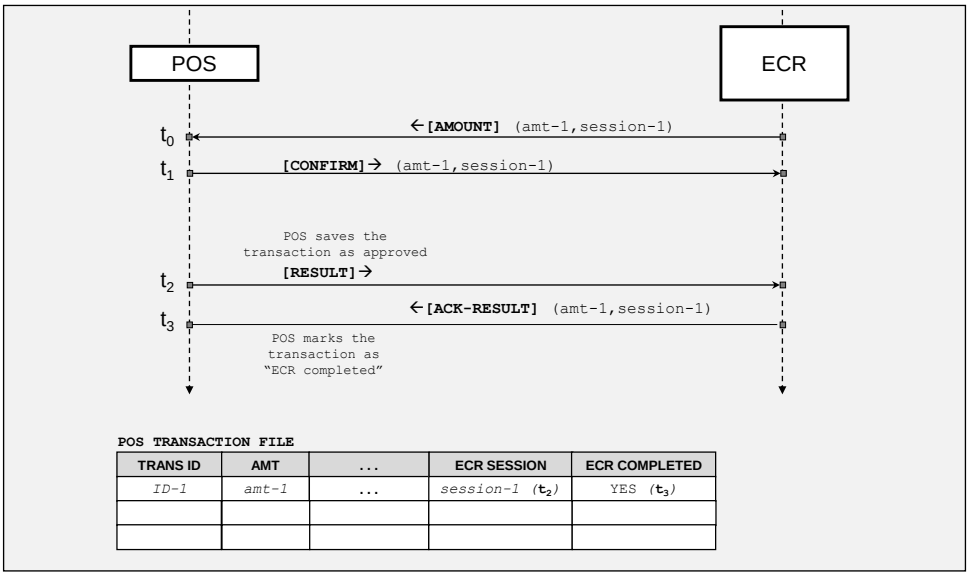

Picture 1

4.2. FLOW IN CASE OF FAILURE TO PROCESS A PAYMENT TRANSACTION

[t0]	EFTPOS ← [**AMOUNT**] ← ECR	
[t1]	EFTPOS → [**ERROR**] → ECR EFTPOS acknowledges the download, but with an error code, declares to the ECR that processing is not possible.	t1-t0 < 2 sec

4.3. ECHO FLOW

[t0]	EFTPOS ← [**ECHO**] ← ECR	
[t1]	EFTPOS → [**ECHO**] → ECR	t1-t0 < 2 sec

4.4. FLOW OF EXECUTING CONTROL COMMAND

[t0]	EFTPOS ← [**CONTROL**] ← ECR It is possible for the ECR to configure certain parameters of EFTPOS related to the interface with the ECR	
[t1]	EFTPOS →[SUCCESS ή ERROR]→ ECR	t1-t0 < 2 sec

4.5. REPEAT FLOW [RESULT] OF LAST TRANSACTION

[t0]	EFTPOS ← [**RESEND-ONE**] ← ECR If the transaction was approved by the EFTPOS but due to a connection problem the ECR does not receive the answer [RESULT] or if theEFTPOS does not receive the answer [ACK-RESULT], the ECR operator can select this action to complete the normal flow.	
[t1]	EFTPOS → [**RESULT**] → ECR EFTPOS searches in the transaction package for the last transaction and, if it matches the data of the request, sends its details immediately. Otherwise it returns rejection.	t1-t0 < 5 sec
[t2]	EFTPOS ← [**ACK-RESULT**] ← ECR The ECR acknowledges receipt of the final result and the EFTPOS registers (if it was an approval) that the transaction has been fully processed by the ECR.	t2-t1 < 2 sec

A schematic iteration flow of the [RESULT], is shown in Picture 5.

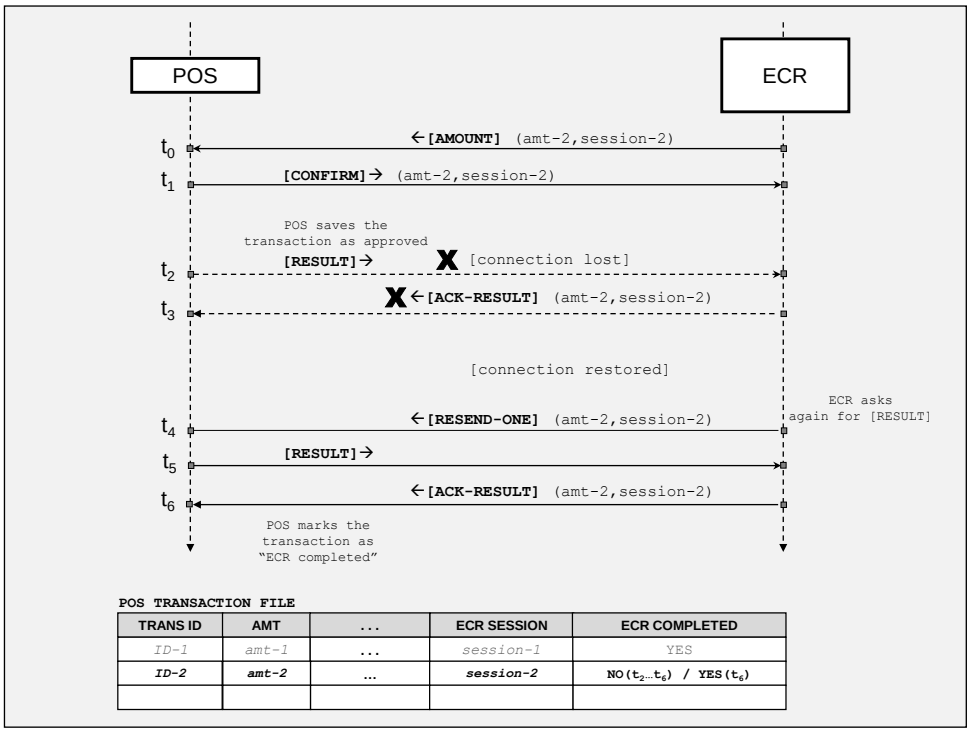

Picture 5

4.6. FLOW FOR REPEATED [RESULT] OF ALL PENDING REFUND TRANSACTIONS EXECUTED AUTONOMOUSLY BY THE EFTPOS WITHOUT USING ECR, AND OF ALL EXECUTED TRANSACTIONS REFERRED TO PRELOADED RECEIPTS AND INVOICES ALREADY ISSUED BY THE ECR

[t0]	EFTPOS ← [**RESEND-ALL**] ← ECR If EFTPOS has stored refund transactions that were executed autonomously, or sale transactions performed by the EFTPOS as preloaded receipts or preloaded ECR invoices ,then EFTPOS does not allow the option "SEND PACKAGE", i.e. the clearing of transactions by the payment service provider and the payment of the merchant. In this case, the ECR operator should request EFTPOS through a specific command to receive these pending transactions.	
[t1]	EFTPOS starts sending all refund transactions that were executed autonomously, as well as all sale transactions that were executed based on preloaded ECR's receipts or invoices . In the case of refund transactions, , as they do not have an ECR *session-number*, this	t1-t0 < 5 sec

	is sent as "**POSTXN**". EFTPOS → [**RESULT**] → ECR EFTPOS ← [**ACK-RESULT**] ← ECR EFTPOS → [**RESULT**] → ECR EFTPOS ← [**ACK-RESULT**] ← ECR . . . . EFTPOS → [**RESULT**] → ECR EFTPOS ← [**ACK-RESULT**] ← ECR [RESEND-ALL] does not send print data even if it is supported by ECR. The last [RESULT] has a zero amount, zero *session number* and it is a rejection, signaling the end of the dispatch.	

An example of a repeat flow for pending transactions is illustrated in Figure 6. The EFTPOS resends [RESULT] for only 2 transactions:

- For ID-3, which concerns a refund transaction
- For ID-4, which originated from EFTPOS as it corresponded to a receipt already issued by ECR and which was loaded into EFTPOS for later card payment.

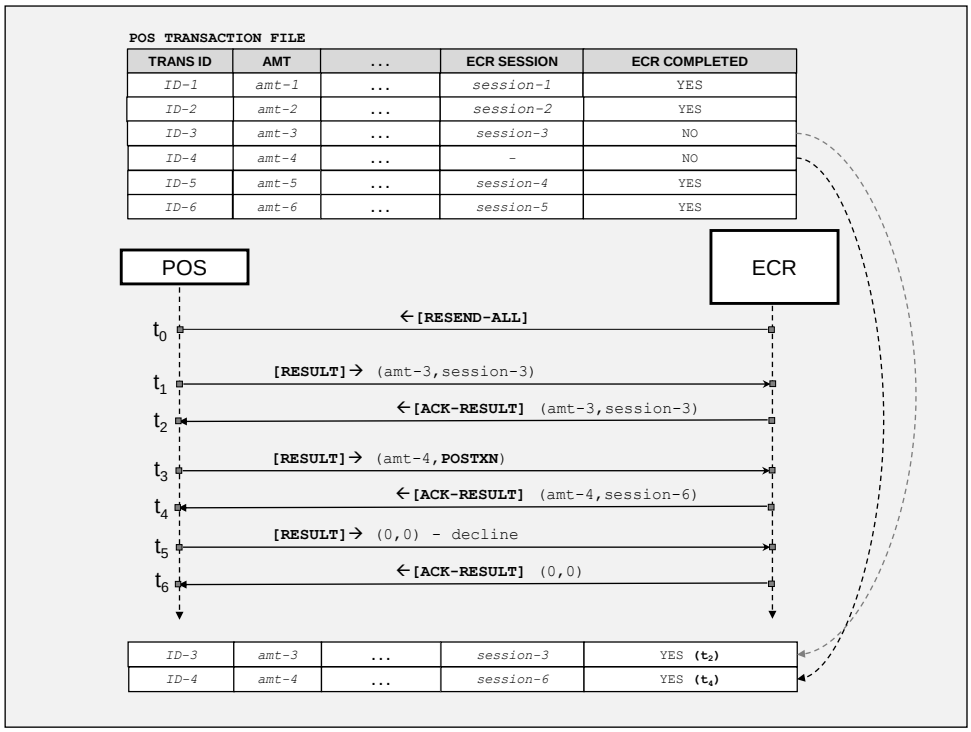

Picture 6

5. FLOW AND MESSAGES IN DETAIL

5.1. MESSAGE SYNTAX

Each message consists of a header and a body as follows:

BYTES	ΠΕΡΙΓΡΑΦΗ	
0-1	MSG SIZE (2 bytes, binary)	The size of the message that follows in bytes: MSG SIZE: b0*256 + b1
2-4	DIRECTION INDICATOR (3 bytes, ascii)	Characterizes the source of the message: **ECR** (from ECR to EFTPOS) **EFTPOS** (from EFTPOS to ECR)
5-6	PROTOCOL VARIANT (2 bytes, ascii)	Specifies flow and function: **01**: default mode ("variant 1") **02**: ECR undertakes the printing of the EFTPOS receipt ("variant 2")

7-8	PROTOCOL VERSION (2 bytes, ascii)	Specifies the syntax in the body of the message.
9-...	Main part of message (MSG SIZE-7)	As specified below.

SPECIAL CASES

In RS232 connection, the string "ECR" or "POS" respectively will be used as a prefix of the entire message..

The middleware connection will be prefixed with the string "ACQ<3-digits-acqId>TID<8-digits-POS-tid>", where ACQ will be a specified three-digit code of the acquirer.

The body of the message consists of a prefix of a capital latin letter that identifies its type, followed by fields which are also usually prefixed with a capital letter. Each field can be subdivided into subfields, whose meaning is determined by their location alone.

The field separator is '/' and the subfield separator is ':'. The escape character is '\', although there is no need to use an escape character. The main body has the following syntax:

MSG BODY: = <*msg type*>/<*field*>{/<*field*>{/<*field*>}...}

msg type := <*letter*>

field := {<*letter*>}<*subfield*>{:<*subfield*>{:<*subfield*>}...}

letter := A | B | C | ... | Z

subfield := as specified in each case (data type, byte count, meaning)

Data types have the following abbreviations:

num – numeric, right-aligned and filled with 0

an – alphanumeric, no spaces allowed nor special characters

anp – alphanumeric, spaces allowed

ans – alphanumeric, spaces and special characters allowed

5.2. [ECHO] MESSAGE

It is sent by ECR at the operator's choice (usually during installation) to check the connection to the EFTPOS. Terminal ID and EFTPOS application version are added to the echo.

Syntax:

ECR REQUEST:

X/<*text*>

EFTPOS RESPONSE:

X/<*text*>/T<*tid*>:<*app-version*>

Element	Type	Size	Description
text	anp	1..200	Free text, which is expected in response
tid	an	1..8	Terminal ID
app-version	ans	1..10	EFTPOS application version

Example:

```
ECR->EFTPOS: BYTES 23
00 17                                           |..
45 43 52 30 32 31 30 58 2F 48 65 6C 6C 6F 20 66 |ECR0210X/Hello f
72 6F 6D 20 45 43 52                            |rom ECR
EFTPOS->ECR: BYTES 42
00 2A 50 4F 53 30 32 31 30 58 2F 48 65 6C 6C 6F |.*POS0210X/Hello
20 66 72 6F 6D 20 45 43 52 2F 54 36 34 39 39 39 | from ECR/T64999
39 39 39 3A 31 2E 35 2E 32 33 2E 30             |999:8.5.23.0
```

5.3. [AMOUNT] MESSAGE

It is sent by ECR at the start of a new purchase.

Syntax:

ECR REQUEST:

A/**S**<*session number*>/**F**<*amount*>:<cur-code>:<cur-exp> /**D**<*datetime*>/***R***<*ecr-id*>/***H***<*operator-number*>/***T***<*receipt number*> /**M**<*custom-data*>{/***Q***<*mac*>}

Element	Type	Size	Description
session number	an	6	Different for each new purchase 6-digit number. May be sequential, pseudo-random or under another logic. **EFTPOS must check that each new request comes with a different session number than the previous one.**
Amount	num	1..12	The amount of the transaction
cur-code	num	3	The ISO 4217 currency code (978 for €)
cur-exp	num	1	The decimals of the currency (2 for €)
Datetime	num	14	Current date and time in YYYYMMDDhhmmss format
ecr-id	an	11	ECR serial number
operator-number	an	1..8	Cashier's code
receipt-number	an	1..8	ECR progressive receipt number
custom-data	ans	1..100	Data to be specified per case and type of ECR. If it is not used, it is sufficient to send a zero character ("M0"). **In bill payment transactions the custom-data includes a special 12-digit payment code.**
mac	an	8	T-DES mac mechanism for authenticating ECR requests. The MAC is calculated on the whole message from the prefix letter to the '/Q' (without it). By convention the first 4 bytes of the MAC (expressed in ASCII) are used. **The MAC is mandatory.** It is optional only in

			software maintenance and troubleshooting mode.

Example:

```
ECR->EFTPOS: BYTES 81
00 51                                    |.Q
45 43 52 30 32 31 30 41 2F 53 30 30 31 30 30 38 |ECR0210A/S001008
2F 46 32 35 30 30 3A 39 37 38 3A 32 2F 44 32 30 |/F2500:978:2/D20
32 32 30 35 32 34 31 30 32 35 31 37 2F 52 41 42 |220524102517/RAB
43 30 30 31 31 31 32 32 32 2F 48 31 32 31 2F 54 |C00111222/H121/T
31 30 32 30 2F 4D 30 2F 51 35 39 44 31 39 45 37 |1020/M0/Q59D19E7
44                                       |D
```

5.4. [CONFIRMED] MESSAGE

It is sent directly by EFTPOS in response to ECR's initial purchase request, acknowledging that processing is in progress.

Syntax:

EFTPOS RESPONSE:

A/S<*session number*>/F<*amount*>/*R*<*ecr-id*>/*T*<*receipt-number*>

Element	Type	Size	Description
session number	an	6	It must be the same as that of [AMOUNT] and this must be checked by ECR.
amount	num	1..12	
ecr-id	an	11	
receipt-number	an	1..8	

Example:

```
EFTPOS->ECR: BYTES 41
00 29 50 4F 53 30 32 31 30 41 2F 53 30 30 31 30 |.)POS0210A/S0010
30 38 2F 46 32 35 30 30 2F 52 41 42 43 30 30 31 |08/F2500/RABC001
31 31 32 32 32 2F 54 31 30 32 30                |11222/T1020
```

5.5. [RESULT] MESSAGE

It is sent by EFTPOS as a final response to ECR's initial purchase (or other transaction) request regarding the outcome of the transaction.

The answer can come immediately (if it concerns offline rejection or approval), in a few seconds (typical case of online approval) or even more than a minute if online

communication or PIN entry is delayed. A timeout setting of >150 sec in ECR is recommended.

Syntax:

R/S<*session number*>/*R*<*ecr-id*>/*T*<*receipt-number*>{:<*receipt-number*>}

/*M*<*custom-data*>/C<rsp-*code*>{/D<*trans-data*>{/P<*prn-data*>}}

- The field *<trans-data>* is returned only if the transaction was approved, i.e. the <rsp-code> is 00.

  The *field <trans-data>* consists of the following elements:

  <trans-data> =<card-type>:<txn-type>:<cardpan-masked>:

  <amount>:<amount-final>:<amount-tip>:

  *<amount-loy>:<amount-cb>:<bankId (*Acqid*) >:<terminalId>:*

  <batch-num>:<rrn>:<stan>:<authcode>:

  <trans-datetime>:<txn-ecr-status>

- The <prn-data> field is returned if a) the transaction was approved b) the protocol variant in the message header [AMOUNT] was 02 c) the protocol variant in the message header [RESULT] is also 02[1]. It is normally 1-4 Kb in size and is composed of the lines to be printed together with specified formatting characters as specified below. 1: There is the case that the EFTPOS must print the receipt, regardless the capability of the ECR to print it

Element	Type	Size	Description
session number	an	6	They must be the same as those of [CONFIRMED] **and this must be checked by the ECR unless it is the following exception**

ecr-id	an	11	**where such a check cannot be made or is not certain to succeed.** Exception: in case the [RESULT] message comes in response to a [RESEND-ALL] message, the **session number** may have the special value "POSTXN", which means that the transaction was initiated by EFTPOS. In this case the elements: • ***ecr-id*** *and* ***receipt-number*** *will have a zero value if the transaction took place only in EFTPOS.* • ***ecr-id*** *and* ***receipt-number*** *will have a non zero value if the transaction corresponds to a pre-loaded receipt or invoice issued by the FEM.*
receipt-number *(progressive number on Fiscal ECR, Fiscal Printers, Fiscal Sign Machines)*	an	1..8	
rsp-code	num	2	EFTPOS transaction outcome code: **00**: success, transaction approved **33**: general rejection code In some implementations the outcome code better identifies the reason for rejection as follows: **03**: user cancellation or timeout **04**: declined by the terminal **05**: declined by the host **06**: communication problem **09**: bank's host unreachable **66**: system error in EFTPOS

card-type	an	1..20	The type of card (Visa, Mastercard, etc.)

txn-type	num	2	Type of transaction: **00:** purchase **01**: void **02**: refund **03**: pre-approval entry **04**: mail order **05**: purchase by instalments
card-pan-masked	ans	14..19	The card number with the intermediate digits masked.
Amount	num	1..12	The amount of the transaction. It must be the same as that of [CONFIRMED] **and this must be checked by ECR.**

amount-final	num	1..12	It may differ from the amount in case of loyalty with redemption or added tip.

amount-tip	num	1..12	Tip amount
amount-loy	num	1..12	Loyalty redemption amount
amount-cb	num	1..12	Amount of cashback
*bankId (*Acqid)	num	1..3	Code of the payment service provider or the final acquiring bank. Useful in configurations with multiple approval banks (multiacquiring)
terminalId	an	1..8	The terminal Id.
batch-num	num	1..6	The package number in EFTPOS
rrn	num	0..12	The rrn of the transaction In some implementations may be empty in the case of off-line checks.
stan	num	1..6	The transaction number in EFTPOS
authcode	an	6..8	The authorisation code
trans-datetime	num		Date and time of approval in YYYYMMDDhhmmss format

txn-ecr-status	num	1	Characterizes the transaction as a communication with ECR • 0 - initiated by ECR - success • 1 - initiation by ECR - failure to complete (initial RESULT) • 2 - initiation in EFTPOS by typing the receipt data • 3 - initiation in EFTPOS by typing the receipt data, which have been found in a previous EFTPOS record. • 4 - initiation from EFTPOS without entering receipt data. • 5 – initiation from EFTPOS without typing the receipt data, because the sale has been made with an invoice.
prn-data	ans	0..4Kb	It is composed of lines to be printed and control characters for special formatting as follows: ▪ **0x0A** - line change ▪ **0x1B 0x01** - print basic logo ▪ **0x1B 0x02** - print 2nd logo (e.g. loyalty) ▪ **0x1B 0x03** - print c- less icon ▪ **0x1B 0x04** to **0x1B 0x06** reserved for icon use ▪ **0x1B 0x07** to **0x1B 0x09** reserved for use of BAR/QR codes ▪ **0x1B 0x0C** - pause for printing client copy ▪ **0x1B 0x43** - centre alignment ▪ **0x1B 0x52** - right alignment ▪ **0x1B 0x4C ('L')** - left alignment (default after new line) ▪ **0x1B 0x4E ('N')** - use regular size characters (default) ▪ **0x1B 0x42 ('B')** - use bold characters ▪ **0x1B 0x53 ('S')** - use small characters

			Greek characters are sent in ISO- 8859-7. Cyrillic characters are sent in ISO-8859-5.

Examples:

1. Example of rejection

[220524 184605] ECR connection from [10.1.101.129] ECR->EFTPOS: BYTES 81 00 51 |.Q 45 43 52 30 31 31 30 41 2F 53 30 30 31 30 34 39 |ECR0110A/S001049 2F 46 32 35 30 30 3A 39 37 38 3A 32 2F 44 32 30 |/F2500:978:2/D20 32 32 30 35 32 34 31 37 34 32 33 31 2F 52 41 42 |220524174231/RAB 43 30 30 31 31 31 32 32 32 2F 48 31 32 31 2F 54 |C00111222/H121/T 31 30 34 34 2F 4D 30 2F 51 36 42 32 38 37 45 39 |1044/M0/Q6B287E9 35 |5	**[AMOUNT]**

EFTPOS->ECR: BYTES 41 00 29 50 4F 53 30 31 31 30 41 2F 53 30 30 31 30 |.)POS0110A/S0010 34 39 2F 46 32 35 30 30 2F 52 41 42 43 30 30 31 |49/F2500/RABC001 31 31 32 32 32 2F 54 31 30 34 34 |11222/T1044 [220524 184606] ECR request [220524 184610] TXN-C [1][552053xxxxxx9096][000000002500] [220524 184616] Connecting (0) to [.....] [220524 184618] T [280]===>	**[CONFIRMED]** **online** **authorization**

[220524 184619] <===H [128] . . . . . . [220524 184622] TXN-C declined (75) rrn=214430253013 EFTPOS->ECR: BYTES 42	[RESULT]

2. Approval example (without printing print data – “variant-1”):

[220524 185118] ECR connection from [10.1.101.129] ECR->EFTPOS: BYTES 81 00 51 |.Q 45 43 52 30 31 31 30 41 2F 53 30 30 31 30 35 30 |ECR0110A/S001050 2F 46 32 30 30 30 3A 39 37 38 3A 32 2F 44 32 30 |/F2000:978:2/D20 32 32 30 35 32 34 31 37 34 37 34 34 2F 52 41 42 |220524174744/RAB 43 30 30 31 31 31 32 32 32 2F 48 31 32 31 2F 54 |C00111222/H121/T 31 30 34 35 2F 4D 30 2F 51 31 45 44 45 43 43 44 |1045/M0/Q1EDECCD 39 |9 EFTPOS->ECR: BYTES 41 00 29 50 4F 53 30 31 31 30 41 2F 53 30 30 31 30 |.)POS0110A/S0010 35 30 2F 46 32 30 30 30 2F 52 41 42 43 30 30 31 |50/F2000/RABC001 31 31 32 32 32 2F 54 31 30 34 35 |11222/T1045	**[AMOUNT]** **20,00€** **[CONFIRMED]**

[220524 185118] ECR request . . . . . . [220524 185124] TXN-L [1][422164xxxxxx5257][2000] [220524 185129] Connecting (0) to [.....] [220524 185131] T [117]===> . . . . [220524 185135] TXN-L authorized (890753) rrn=214430253014 EFTPOS->ECR: BYTES 147 00 93 50 4F 53 30 31 31 30 52 2F 53 30 30 31 30 |..POS0110R/S0010 35 30 2F 52 41 42 43 30 30 31 31 31 32 32 32 2F |50/RABC00111222/ 54 31 30 34 35 2F 4D 30 2F 43 30 30 2F 44 56 69 |T1045/M0/C00/DVi 73 61 20 43 72 65 64 69 74 3A 30 30 3A 34 32 32 |sa Credit:00:422 31 36 34 2A 2A 2A 2A 2A 2A 35 32 35 37 3A 32 30 |164******5257:20 30 30 3A 32 30 30 30 3A 30 3A 30 3A 30 3A 31 31 |00:2000:0:0:0:11 3A 36 34 39 39 39 39 39 39 3A 31 32 36 3A 32 31 |:64999999:126:21 34 34 33 30 32 35 33 30 31 34 3A 38 36 3A 38 39 |4430253014:86:89 30 37 35 33 3A 32 30 32 32 30 35 32 34 31 38 35 |0753:20220524185 31 33 35 3A 30 |135:0 ECR->EFTPOS: BYTES 41 00 29 |.) 45 43 52 30 31 31 30 52 2F 53 30 30 31 30 35 30 |ECR0110R/S001050 2F 52 41 42 43 30 30 31 31 31 32 32 32 2F 46 32 |/RABC00111222/F2	**online** **authorization** **EFTPOS** **[ACQ-RESULT]**

3. Approval example (with print data sending – “variant-2”):

[220524 190150] ECR connection from [10.1.101.129] ECR->EFTPOS: BYTES 80 00 50 |.P 45 43 52 30 32 31 30 41 2F 53 30 30 31 30 35 33 |ECR0210A/S001053	[AMOUNT]

2F 46 35 30 30 3A 39 37 38 3A 32 2F 44 32 30 32 |/F500:978:2/D202 32 30 35 32 34 31 37 35 38 31 35 2F 52 41 42 43 |20524175815/RABC 30 30 31 31 31 32 32 32 2F 48 31 32 31 2F 54 31 |00111222/H121/T1 30 34 38 2F 4D 30 2F 51 36 43 30 42 38 38 35 42 |048/M0/Q6C0B885B EFTPOS->ECR: BYTES 40 00 28 50 4F 53 30 32 31 30 41 2F 53 30 30 31 30 |.(POS0210A/S0010 35 33 2F 46 35 30 30 2F 52 41 42 43 30 30 31 31 |53/F500/RABC0011 31 32 32 32 2F 54 31 30 34 38 |1222/T1048 [220524 190150] ECR request [220524 190154] TXN-L [1][422164xxxxxx5257][500] [220524 190209] Connecting (0) to [.....] [220524 190213] T [276]===> . . . . . . [220524 190214] <===H [152] . . . . . . [220524 190214] TXN-L authorized (890755) rrn=214430253016 EFTPOS->ECR: BYTES 1235 04 D3 50 4F 53 30 32 31 30 52 2F 53 30 30 31 30 |..POS0210R/S0010 35 33 2F 52 41 42 43 30 30 31 31 31 32 32 32 2F |53/RABC00111222/ 54 31 30 34 38 2F 4D 30 2F 43 30 30 2F 44 56 69 |T1048/M0/C00/DVi 73 61 20 43 72 65 64 69 74 3A 30 30 3A 34 32 32 |sa Credit:00:422 31 36 34 2A 2A 2A 2A 2A 2A 35 32 35 37 3A 35 30 |164******5257:50 30 3A 35 30 30 3A 30 3A 30 3A 30 3A 31 31 3A 36 |0:500:0:0:0:11:6 34 39 39 39 39 39 39 3A 31 32 36 3A 32 31 34 34 |4999999:126:2144 33 30 32 35 33 30 31 36 3A 38 39 3A 38 39 30 37 |30253016:89:8907 35 35 3A 32 30 32 32 30 35 32 34 31 39 30 32 31 |55:2022052419021 33 3A 30 2F 50 1B 01 0A 1B 4E C4 4F 4B 49 4D 41 |3:0/P....N.OKIMA D3 54 49 4B 4F D3 20 45 4D D0 4F 50 4F D3 0A 1B |.TIKO. EM.OPO... 4E 54 45 53 54 20 50 4F 53 0A 1B 4E 31 38 35 34 |NTEST POS..N1854	[CONFIRMED] online authorization [RESULT] With print data. The print result is shown in

37 2C 20 20 D0 45 49 50 41 49 41 D3 0A 0A 1B 53 |7, .EIPAIA....S C1 D1 2E D4 C1 CC C5 C9 C1 CA C7 D3 3A 20 41 42 |.....: AB 43 30 30 31 31 31 32 32 32 0A 1B 53 D7 C5 C9 D1 |C00111222..S.... C9 D3 D4 C7 D3 3A 20 31 32 31 0A 1B 53 C1 D1 2E |.....: 121..S... D3 D5 CD C4 C5 D3 C7 D3 3A 20 31 30 35 33 0A 1B |.....: 1053.. 53 C1 D1 2E C1 CB D0 2F C1 D0 D5 3A 20 31 30 34 |S...../...: 104 38 0A 0A 1B 4E 32 34 2F 30 35 2F 32 30 32 32 1B |8...N24/05/2022. 52 1B 4E 31 39 3A 30 32 0A 1B 43 1B 42 56 69 73 |R.N19:02..C.BVis 61 20 43 72 65 64 69 74 0A 0A 1B 4E 2A 2A 2A 2A |a Credit...N**** 2A 2A 2A 2A 2A 2A 2A 2A 35 32 35 37 0A 0A 1B 43 |********5257...C 1B 53 28 28 28 63 6F 6E 74 61 63 74 6C 65 73 73 |.S(((contactless 29 29 29 0A 1B 43 1B 53 56 49 53 41 20 43 4F 4E |)))..C.SVISA CON 54 41 43 54 4C 45 53 53 0A 1B 43 1B 42 C1 C3 CF |TACTLESS..C.B... D1 C1 2D 53 41 4C 45 0A 1B 42 D0 CF D3 CF 2F C1 |..-SALE..B..../. CC D4 3A 1B 52 1B 42 35 2C 30 30 20 45 55 52 0A |..:.R.B5,00 EUR. 0A 1B 4E C1 D1 2E D4 C5 D1 CC C1 D4 C9 CA CF D5 |..N..... 3A 20 36 34 39 39 39 39 39 39 0A 1B 4E C1 D1 2E |: 64999999..N... D0 C1 CA C5 D4 CF D5 3A 20 31 32 36 0A 1B 4E C1 |.....: 126..N. D1 2E D3 D5 CD C1 CB CB C1 C3 C7 D3 3A 20 38 39 |.....: 89 0A 1B 4E CA D9 C4 2E C5 C3 CA D1 C9 D3 C7 D3 3A |..N.....: 20 38 39 30 37 35 35 0A 1B 4E 52 52 4E 3A 20 32 | 890755..NRRN: 2 31 34 34 33 30 32 35 33 30 31 36 0A 0A 1B 53 4D |14430253016...SM 49 44 3A 20 31 32 33 34 38 31 34 20 30 30 30 37 |ID: 1234814 0007 0A 1B 53 4C 31 31 20 76 31 2E 35 2E 32 33 2E 30 |..SL11 v1.5.23.0 0A 0A 1B 53 41 50 2E 4C 41 42 45 4C 3A 20 56 69 |...SAP.LABEL: Vi 73 61 20 43 72 65 64 69 74 0A 1B 53 41 49 44 3A |sa Credit..SAID: 20 41 30 30 30 30 30 30 30 30 33 31 30 31 30 0A | A0000000031010. 1B 43 1B 42 D6 D5 CB C1 CE D4 C5 20 D4 CF 20 C1 |.C.B..... .. . CD D4 C9 C3 D1 C1 D6 CF 0A 1B 43 1B 42 C1 CD D4 |.....C.B...	**Figure 7**

C9 C3 D1 C1 D6 CF 20 C5 CC D0 CF D1 CF D5 0A 1B |..... .....

43 1B 42 2A 2A 2A 2A 20 C5 D5 D7 C1 D1 C9 D3 D4 |C.B**** .....

CF D5 CC C5 20 2A 2A 2A 2A 0A 1B 4E 0A 0A 0A 0A |.... ****..N....

0A 1B 0C 1B 01 0A 1B 4E C4 4F 4B 49 4D 41 D3 54 |.....N.OKIMA.T

49 4B 4F D3 20 45 4D D0 4F 50 4F D3 0A 1B 4E 54 |IKO. EM.OPO...NT

45 53 54 20 50 4F 53 0A 1B 4E 31 38 35 34 37 2C |EST POS..N18547,

20 20 D0 45 49 50 41 49 41 D3 0A 0A 1B 53 C1 D1 | .EIPAIA....S..

2E D4 C1 CC C5 C9 C1 CA C7 D3 3A 20 41 42 43 30 |.....: ABC0

30 31 31 31 32 32 32 0A 1B 53 D7 C5 C9 D1 C9 D3 |0111222..S.....

D4 C7 D3 3A 20 31 32 31 0A 1B 53 C1 D1 2E D3 D5 |...: 121..S.....

CD C4 C5 D3 C7 D3 3A 20 31 30 35 33 0A 1B 53 C1 |.....: 1053..S.

D1 2E C1 CB D0 2F C1 D0 D5 3A 20 31 30 34 38 0A |...../...: 1048.

0A 1B 4E 32 34 2F 30 35 2F 32 30 32 32 1B 52 1B |..N24/05/2022.R.

4E 31 39 3A 30 32 0A 1B 43 1B 42 56 69 73 61 20 |N19:02..C.BVisa

43 72 65 64 69 74 0A 0A 1B 4E 34 32 32 31 36 34 |Credit...N422164

2A 2A 2A 2A 2A 2A 35 32 35 37 0A 0A 1B 43 1B 53 |******5257...C.S

28 28 28 63 6F 6E 74 61 63 74 6C 65 73 73 29 29 |(((contactless))

29 0A 1B 43 1B 53 56 49 53 41 20 43 4F 4E 54 41 |)..C.SVISA CONTA

43 54 4C 45 53 53 0A 1B 43 1B 42 C1 C3 CF D1 C1 |CTLESS..C.B.....

2D 53 41 4C 45 0A 1B 42 D0 CF D3 CF 2F C1 CC D4 |-SALE..B..../...

3A 1B 52 1B 42 35 2C 30 30 20 45 55 52 0A 0A 1B |:.R.B5,00 EUR...

4E C1 D1 2E D4 C5 D1 CC C1 D4 C9 CA CF D5 3A 20 |N.............:

36 34 39 39 39 39 39 39 0A 1B 4E C1 D1 2E D0 C1 |64999999..N.....

CA C5 D4 CF D5 3A 20 31 32 36 0A 1B 4E C1 D1 2E |.....: 126..N...

D3 D5 CD C1 CB CB C1 C3 C7 D3 3A 20 38 39 0A 1B |.....: 89..

4E CA D9 C4 2E C5 C3 CA D1 C9 D3 C7 D3 3A 20 38 |N.....: 8

39 30 37 35 35 0A 1B 4E 52 52 4E 3A 20 32 31 34 |90755..NRRN: 214

34 33 30 32 35 33 30 31 36 0A 0A 1B 53 4D 49 44 |430253016...SMID

3A 20 31 32 33 34 38 31 34 20 30 30 30 37 0A 1B |: 1234814 0007..

53 4C 31 31 20 76 31 2E 35 2E 32 33 2E 30 0A 0A |SL11 v1.5.23.0.. 1B 53 41 50 2E 4C 41 42 45 4C 3A 20 56 69 73 61 |.SAP.LABEL: Visa 20 43 72 65 64 69 74 0A 1B 53 41 49 44 3A 20 41 | Credit..SAID: A 30 30 30 30 30 30 30 30 33 31 30 31 30 0A 1B 43 |0000000031010..C 1B 42 C1 CD D4 C9 C3 D1 C1 D6 CF 20 D0 C5 CB C1 |.B..... .... D4 C7 0A 1B 43 1B 42 2A 2A 2A 2A 20 C5 D5 D7 C1 |....C.B**** .... D1 C9 D3 D4 CF D5 CC C5 20 2A 2A 2A 2A 0A 1B 4E |..... ****..N 0A 0A 0A 0A 0A |.....	[ACQ-RESULT]
ECR->EFTPOS: BYTES 40 00 28 |.(45 43 52 30 32 31 30 52 2F 53 30 30 31 30 35 33 |ECR0210R/S001053 2F 52 41 42 43 30 30 31 31 31 32 32 32 2F 46 35 |/RABC00111222/F5 30 30 2F 54 31 30 34 38 |00/T1048 [220524 190216] ECR connection closed	

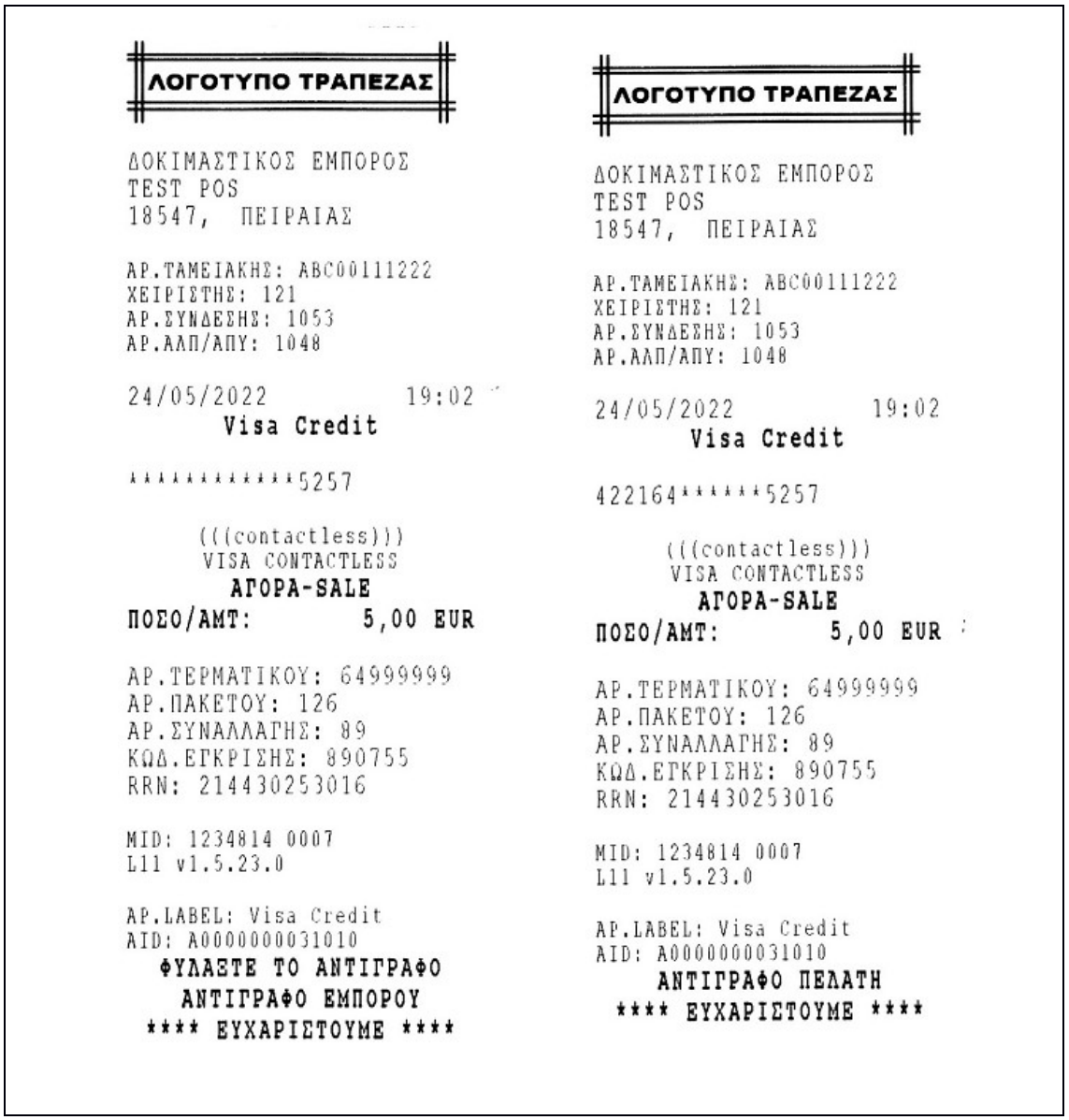

Picture 7

5.6. [ACK-RESULT] MESSAGE

It is sent by ECR as acknowledgement of receipt of [RESULT].

Syntax:

ECR RESPONSE:

R/S<session *number*>/*R<ecr-id>*/F<amount>

/*T<receipt-number>*{*:<receipt-number>*}

Element	Type	Size	Description

session number	an	6	They must be the same as those of [RESULT] **and this must be checked by EFTPOS.** Exception: (see message [RESULT])
ecr-id	an	11	
amount	num	1..12	
receipt – number	an	1...8	

Example: Section 5.5 for cases 2 and 3.

5.7. [REGRECEIPT] MESSAGE

It is sent by ECR with retail receipt data issued for later payment (e.g. for home delivery). This is the process of uploading receipts or invoices already issued by the FEM into EFTPOS, which must be paid by card later.

EFTPOS stores the receipt details (amount, session number, receipt number) and has them available for use for 24 hours.

It is the same as the [AMOUNT] message except for the original symbol which is W.

The *custom-data* field may have a brief note, as free text, related to the payment.

Syntax:

ECR REQUEST:

W/S<session *number*>/F<amount>:<cur-code>:<cur-exp>

/D<datetime>/R<ecr-id>/*H<operator-number>*/*T<receipt number>*

/M<custom-data>{/*Q<mac>*}

POS CONFIRMATION

W/S <session number>/F<amount>/R<ecr-id>/T<receipt number>

5.8. [RESEND-ONE] MESSAGE

It is sent by the ECR at the choice of the operator, in case the EFTPOS approved the transaction but failed to send [RESULT].

Syntax:

ECR REQUEST:

O/S<*session number*>/F<*amount*>:<*cur-code*>:<*cur-exp*>

/*R*<*ecr-id*>/*T*<*receipt-number*>{/*Q*<*mac*>}

Element	Type	Size	Description
session number	an	6	They must match those of the transaction approved in EFTPOS.
amount	num	1..12	
cur-code	num	3	
cur-expo	num	1	
ecr-id	an	11	
receipt-number	an	1..8	
mac	an	8	(See [AMOUNT])

Example:

```
[220524 193308] ECR connection from [10.1.101.135]
ECR->EFTPOS: BYTES 56
00 38                                    |.8
45 43 52 30 31 31 30 4F 2F 53 30 30 31 30 35 38 |ECR0110O/S001058
2F 46 31 35 30 3A 39 37 38 3A 32 2F 52 41 42 43 |/F150:978:2/RABC
30 30 31 31 31 32 32 32 2F 54 31 30 35 31 2F 51 |00111222/T1051/Q
46 37 31 36 37 41 39 46                  |F7167A9F
[220524 193309] ECR request
EFTPOS->ECR: BYTES 145
00 91 50 4F 53 30 31 31 30 52 2F 53 30 30 31 30 |..POS0110R/S0010
35 38 2F 52 41 42 43 30 30 31 31 31 32 32 32 2F |58/RABC00111222/
54 31 30 35 31 2F 4D 30 2F 43 30 30 2F 44 56 69 |T1051/M0/C00/DVi
73 61 20 43 72 65 64 69 74 3A 30 30 3A 34 32 32 |sa Credit:00:422
31 36 34 2A 2A 2A 2A 2A 2A 35 32 35 37 3A 31 35 |164******5257:15
30 3A 31 35 30 3A 30 3A 30 3A 30 3A 31 31 3A 36 |0:150:0:0:0:11:6
34 39 39 39 39 39 39 3A 31 32 36 3A 32 31 34 34 |4999999:126:2144
33 30 32 35 33 30 31 39 3A 39 32 3A 38 39 30 37 |30253019:92:8907
35 38 3A 32 30 32 32 30 35 32 34 31 39 33 32 30 |58:2022052419320
31 3A 31                                 |1:1
ECR->EFTPOS: BYTES 40
00 28                                    |.(
45 43 52 30 31 31 30 52 2F 53 30 30 31 30 35 38 |ECR0110R/S001058
2F 52 41 42 43 30 30 31 31 31 32 32 32 2F 46 31 |/RABC00111222/F1
35 30 2F 54 31 30 35 31                  |50/T1051
[220524 193310] ECR connection closed
```

5.9. [RESEND-ALL] MESSAGE

It is sent by the ECR at the choice of the operator, in case the EFTPOS cannot close a packet due to pending ECR transactions.

Syntax:

ECR REQUEST:

L/*R*<*ecr-id*>/D<datetime>{/*Q*<*mac*>}

Element name	Type	Size	Description
ecr-id	an	11	EFTPOS should override transactions received from a different ECR.
datetime	num	14	(See [AMOUNT])
mac	an	8	(See [AMOUNT])

Example:

[220524 193856] ECR connection from [10.1.101.135]
ECR->EFTPOS: BYTES 47
00 2F |./
45 43 52 30 31 31 30 4C 2F 52 41 42 43 30 30 31 |ECR0110L/RABC001
31 31 32 32 32 2F 44 32 30 32 32 30 35 32 34 31 |11222/D202205241
38 33 35 32 30 2F 51 30 37 35 32 33 421 39 42 |83520 /Q07523B9B

5.10. [ERROR] MESSAGE

It is sent by EFTPOS as an immediate response to ECR's initial request in cases where it cannot be processed.

Syntax:

EFTPOS RESPONSE:

E/<*error code*>

Element	Type	Size	Description
error code	num	3	001: "protocol not supported" 002: "duplicate request received" 003: "Syntax error in request" 004: "Invalid currency" 100: "Internal EFTPOS error" 500: "Invalid command" 501: "Wrong parameter" 502: "Missing MAC" 503: "MAC error" 504: "MAC not supported" 999: "BUSY"

Explanations by code:

1. Code 001: unsupported protocol. However the EFTPOS response uses the same version and variant of the ECR request in the header.
2. Code 002: the session number is the same as the previous transaction.
3. Code 003: Syntax error in message body.
4. Code 004: the ECR sends an amount in a different currency than that of the EFTPOS.
5. Code 100: Internal problem of EFTPOS.
6. Code 500/501: sent in case of invalid [CONTROL] message.
7. Code 502: ECR request is missing MAC field while required
8. Code 503: ECR request has MAC error
9. Code 504: EFTPOS cannot support MAC (e.g. missing keys)
10. Code 999: EFTPOS is busy (e.g. operations are performed from the menu, communicates for parameters, etc.).

Note: during the period of servicing a transaction originating from ECR, EFTPOS cannot respond to any other request even when printing the receipt of the current transaction.

Examples:

1. **Request from ECR to occupied EFTPOS**

```
ECR->EFTPOS: BYTES 80
00 50                                           |. P
45 43 52 30 32 31 30 41 2F 53 30 30 31 30 31 35 |ECR0210A/S001015
2F 46 32 35 30 3A 39 37 38 3A 32 2F 44 32 30 32 |/F250:978:2/D202
32 30 35 32 34 31 32 33 32 32 39 2F 52 41 42 43 |20524123229/RABC
30 30 31 31 31 32 32 32 2F 48 31 32 31 2F 54 31 |00111222/H121/T1
30 32 37 2F 4D 30 2F 51 33 42 35 34 30 37 33 46 |027/M0/Q3B54073F
EFTPOS->ECR: BYTES 12
00 0C 50 4F 53 30 32 31 30 45 2F 39 39 39       |.. POS0210E/999
```

2. **Request from an ECR that has another currency**

```
ECR->EFTPOS: BYTES 81
00 51                                           |. Q
45 43 52 30 32 31 30 41 2F 53 30 30 31 30 31 36 |ECR0210A/S001016
2F 46 32 30 30 30 3A 36 34 31 3A 32 2F 44 32 30 |/F2000:641:2/D20
32 32 30 35 32 34 31 32 33 35 32 30 2F 52 41 42 |220524123520/RAB
43 30 30 31 31 31 32 32 32 2F 48 31 32 31 2F 54 |C00111222/H121/T
31 30 32 38 2F 4D 30 2F 51 46 38 32 38 36 42 39 |1028/M0/QF8286B9
32                                              |2
EFTPOS->ECR: BYTES 12
00 0C 50 4F 53 30 32 31 30 45 2F 30 30 34       |.. POS0210E/004
```

3. **Request from ECR with unsupported protocol version or variant**

```
ECR->EFTPOS: BYTES 80
00 50                                           |. P
45 43 52 30 33 30 33 41 2F 53 30 30 30 36 37 35 |ECR0303A/S000675
2F 46 32 35 30 30 3A 39 37 38 3A 32 2F 44 32 30 |/F2500:978:2/D20
32 31 31 31 32 32 31 31 35 39 32 37 2F 52 38 2F |211122115927/R8/
48 31 32 31 2F 54 30 30 30 36 37 34 2F 47 3A 30 |H121/T000674/G:0
3A 30 3A 30 3A 30 2F 4D 31 32 33 34 35 36 37 38 |:0:0:0/M12345678
EFTPOS->ECR: BYTES 12
00 0C 4D 45 4C 30 33 30 33 45 2F 30 30 31       |.. POS0303E/001
```

5.11. [SUCCESS] MESSAGE

This is a special case of an [ERROR] message with code 000.

Syntax:

EFTPOS RESPONSE:

E/000

5.12. [CONTROL] MESSAGE

General message for ECR to check EFTPOS behavior.

Syntax:

ECR REQUEST:

U/***R***<*ecr-id*>/C<*command-name*>:<*parameter-value*>{:*paramater-value*}

Element	Type	Size	Description
ecr-id	an	11	
command-name	an	1..20	Symbolic name of the parameter to be adjusted
parameter-value	an	1..50	Value of the parameter

The set of parameters and their possible values is expandable, depending on the needs that will arise.

PARAMETER	VALUES
UNBIND_POS	• 0 - EFTPOS has a locked keyboard and cannot initiate transactions autonomously. • 1 - EFTPOS can execute **refund** transactions autonomously, without an ECR mandate

MAC_K	1st value: MAC session key (32 hex digits), encrypted under a certain master key implanted in both ECR and EFTPOS. 2nd value: the CV of the key (6 hex digits). if the KCV test fails EFTPOS returns E/503 For the example of the chapter Error: 'Reference source not found' would be: MAC_K:1ED9F7AE0B2509281BBC2DE38EF2A12B:CC5FFF

Examples:

1. **Open – close EFTPOS keyboard (not for sale transactions):**

```
ECR->EFTPOS: BYTES 35

00 23                                |.#

45 43 52 30 32 31 30 55 2F 52 41 42 43 30 30 31 |ECR0210U/RABC001

31 31 32 32 32 2F 43 55 4E 42 49 4E 44 5F 50 4F |11222/CUNBIND_PO

53 3A 31                             |S:1

EFTPOS->ECR: BYTES 12

00 0C 50 4F 53 30 32 31 30 45 2F 30 30 30       |..POS0210E/000
```

```
ECR->POS: BYTES 35

00 23                                |.#

45 43 52 30 32 31 30 55 2F 52 41 42 43 30 30 31 |ECR0210U/RABC001

31 31 32 32 32 2F 43 55 4E 42 49 4E 44 5F 50 4F |11222/CUNBIND_PO

53 3A 31                             |S:0

EFTPOS->ECR: BYTES 12

     00   C 50 4F 53 30 32 31 30 45 2F 30 30 30       |..POS0210E/000
```

2. **Successful sending of MAC session key:**

```
ECR->EFTPOS: BYTES 68

00 44                                |.D
```

```
45 43 52 30 32 31 30 55 2F 52 41 42 43 30 30 31 |ECR0210U/RABC001

31 31 32 32 32 2F 43 4D 41 43 5F 4B 3A 31 45 44 |11222/CMAC_K:1ED

39 46 37 41 45 30 42 32 35 30 39 32 38 31 42 42 |9F7AE0B2509281BB

43 32 44 45 33 38 45 46 32 41 31 32 42 3A 43 43 |C2DE38EF2A12B:CC

35 46 46 46                                     |5FFF

EFTPOS->ECR: BYTES 12

00 0C 50 4F 53 30 32 31 30 45 2F 30 30 30       |..POS0210E/000
```

5.13. OTHER TRANSACTION MESSAGES

They have syntax, content and flow just like [AMOUNT] with the only difference being the original symbol, which will also be prefixed to the corresponding message [CONFIRM].

Any additional information necessary for void, refund, etc. (e.g. initial transaction number) is now entered into EFTPOS by the operator and is not received by the ECR.

ECR REQUEST (AMOUNT-REFUND):

Z/S<*session number*>/F<*amount*>:<cur-code>:<cur-exp>

/D<*datetime*>/*R*<*ecr-id*>/*H*<*operator-number*>

/*T*<*receipt number*>/M<*custom-data*>{/*Q*<*mac*>}

EFTPOS CONFIRMATION:

ECR REQUEST (AMOUNT-VOID):

V/S<*session number*>/F<*amount*>:<cur-code>:<cur-exp>

/D<*datetime*>/*R*<*ecr-id*>/*H*<*operator-number*>

/*T*<*receipt number*>/M<*custom-data*>{/*Q*<*mac*>}

EFTPOS CONFIRMATION:

V/S<*session number*>/F<*amount*>/*R*<*ecr-id*>/*T*<*receipt number*>

6. DESCRIPTION OF THE MAC MECHANISM

The relevant mechanism of MAC (message authentication checksum) in terms of implementation for the communication of the two parties is summarized in Picture 2.

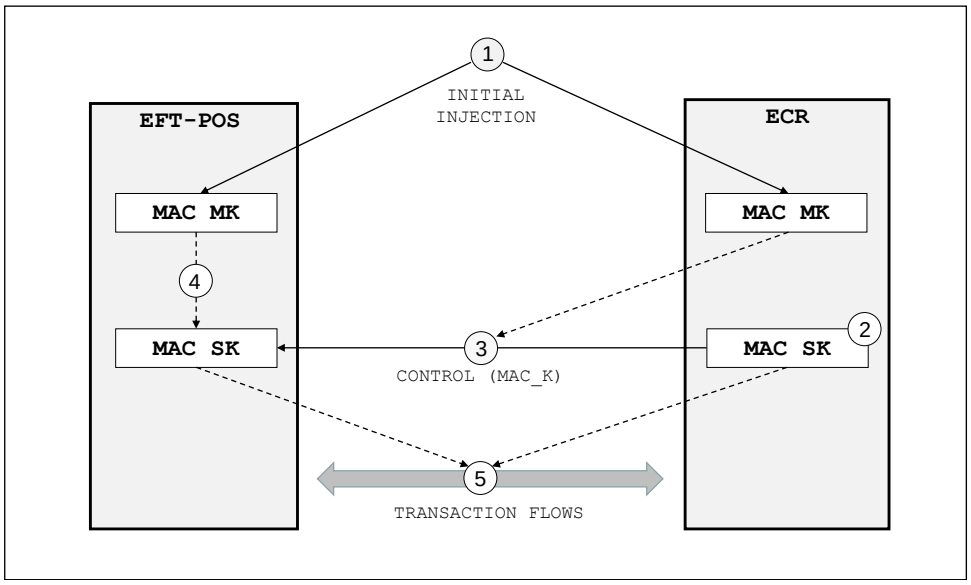

Picture 2

1. At the initial stage of preparation, it is agreed between EFTPOS and ECR providers to implant a common master key (MK) in both devices, with procedures and practices that will protect it from leaking.

2. The ECR generates a pseudorandom session key (SK) for use.

3. Via control flow ([CONTROL] message), ECR sends to EFTPOS, SK encrypted with MK, using T-DES.

4. EFTPOS decrypts SK under MK and stores it for use.

5. During transaction flows, the SK is used to check the validity of the sender of requests.

The SK can be updated regularly using a [CONTROL] message from the ECR.

The MK may be renewed at less frequent intervals, with procedures and mechanisms mutually agreed between EFTPOS and ECR providers.

It is recommended to use a T-DES MAC algorithm (the usual CBC 1 mode) with a double length key (16 bytes).

Example of session key encryption and MAC computation

Test MK (plain): ABCDEF0123456789987654321OABCDEF (KCV: 48934A)

Test SK (plain): 12340000ABCD111122223333FFFFDDDD (KCV: CC5FFF)
Test SK (encr): 1ED9F7AE0B2509281BBC2DE38EF2A12B

Message:

A/S000922/F2000:978:2/D20220513150958/RABC00111222/H121/T000922/M00000000

MAC: 4540A2547CFBA23A

Mac element : **/Q**4540A254

7. SUMMARY OF HANDLING FOR MATCHING DAILY SUMS

A prerequisite for transition to the new interconnection is the closure in both parties of previous pending transactions that had started with any existing interconnection.

IN THE NEW INTERFACE:

EFTPOS will not be allowed to close a daily package if there are transactions that do not have such a match and will refer to ECR processing.

In any case, EFTPOS transactions made without ECR communication are clearly marked on both receipts and daily EFTPOS reports, such as:

- Transaction **POS-1**: if initiated by ECR but communication was interrupted at the end.
- Transaction **POS-2:** if initiated by EFTPOS based on a preloaded receipt or invoice already issued by ECR.
- Transaction **POS-4:** refund transaction made in EFTPOS autonomously without using ECR.

COMMON SCENARIOS:

1) **Purchase at ECR in cash**
2) **Purchase in ECR with card, but the customer did not have a card with him**
It is stopped by EFTPOS and the ECR receives a rejection [RESULT].
3) **Purchase in ECR using card and normal EFTPOS-ECR communication**
EFTPOS automatically receives, registers and prints on its receipt: session number, ecr Id, receipt-number.
4) **Purchase in ECR using card and problematic completion of EFTPOS-ECR communication**
    - EFTPOS automatically receives, registers and prints: session number, ecrId, receipt-number.
    - The ECR does not receive the final EFTPOS response and does not print a receipt. The EFTPOS shall mark the relevant registration as pending for the ECR. The EFTPOS receipt is additionally printed "**Σ/ΓΗ POS-1**".
    - The ECR operator can ask EFTPOS to repeat the final response (e.g.

"RESEND ONE" with a "POS RESEND" option) and print a receipt. The EFTPOS then marks the relevant record as completed for the ECR.

CLOSING A PACKAGE IN EFTPOS:

If EFTPOS detects refund transactions executed autonomously or sale transactions executed with preloaded ECR receipts or invoices, it will not allow the action to be performed and will refer to ECR to settle pending issues through an option named e.g. "*CHECK POS PACKAGE*".

The "*CHECK POS PACKAGE"* option executes the RESEND-ALL flow where the ECR receives one by one the pending records from EFTPOS and returns a sessionId.

In any case, the ECR should return an ACK-RESULT message to EFTPOS for each pending record so that EFTPOS can close the package.

A separate file of the basic elements of transactions sent with RESEND-ALL, is kept by the EFTPOS for a long time. Specifically, for each transaction, the following data are kept:

- Date-time
- Type (purchase, void, ...)
- Amount
- ECR communication category (0,1,2,3,4,5)
- ecrId
- Session Id

The availability period of these records is limited by the EFTPOS storage and the daily occurrence of pending records. The standard limit is set at 1000 records.